LiGHT SKY



SHARK LASER

LASER MOVING BEAM

FEATURES

- Efficient and Stable Laser Beam Light: It is an efficient, stable laser beam light with a waterproof rating of IP66.
- Aluminum Alloy Die-Cast Housing: The entire fixture is designed with an aluminum alloy die-cast shell, ensuring stable outdoor use in all weather conditions.
- 190mm Diameter Lens Design: Equipped with a 190mm diameter lens design, it boasts an outstanding optical system achieving a beam angle of 0.8 degrees, releasing a powerful laser beam.
- Long Range and Strong Penetration: 439,000 lx @20m, it offers a far projection distance and strong airborne penetration.
- Rich Colors and Gobos: It is equipped with a variety of colors and gobos. Combined with multiple prism overlays, it can create magnificent laser beam effects.
- Suitable Applications: Suitable for outdoor performances, concerts, entertainment venues, rentals, and various live performance venues.

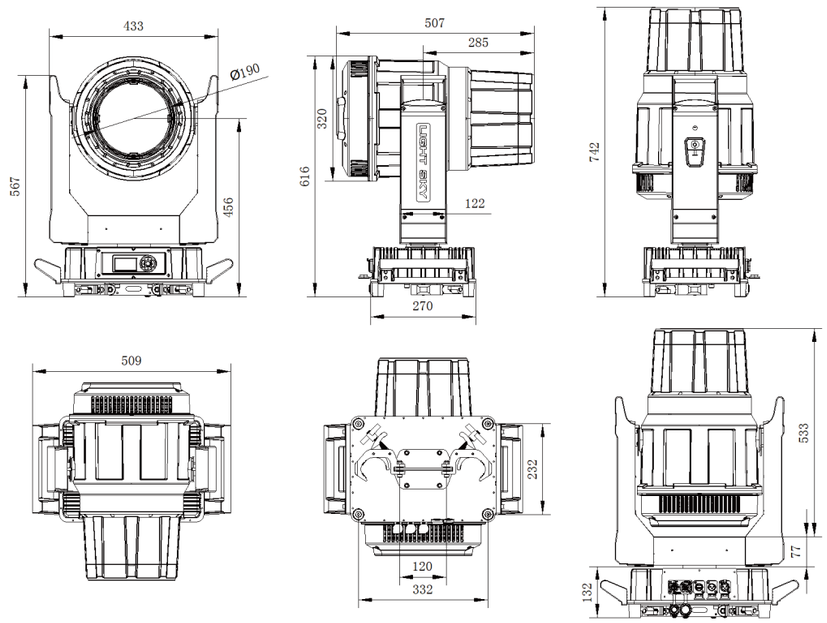

Unit: mm

Light source & Optics

- Light Source:260W White Laser module
- Beam Angle: 0.88° (Optional: 0.63° or 1.13°)
- Front Lens : ϕ190mm High Definition Lens
- Colour Temperature Output: 7490 K
- Color Rendering Index (CRI): Ra≥64
- Lumen Output: 10,090 lm
- Illuminance: 439, 000 lx @20m
- Light Source Theory Life Span: 12,000 h*

Color

- Color Wheel: 14Colors + blank, capable of bi-directional color rainbow effect, bi-color step gradient (linear movement), bi-directional rotating color wheel, random color mode
- CMY: Linear CMY Color Mixing System

Effects

- Static gobo wheel : 11 gobos +1 blank+3 animation,Bi-directional animation, flowing and shaking
- Prism: 8 facet prism+24 facet prism, rotatable in both directions, independently switchable, stackable
- Frost : Independent Frost Effect
- Adjustable pulsed and random strobing from 0.5 to 25 times per second
- Dimmer : 0 to 100% linear dimmer
- Focus : Motorized focus

Control and Programming

- Control Channels: 17CH (see channel chart for details)
- Protocols: DMX512, RDM, Art-Net(Optional)
- DMX and RDM connectors: Locking 3 pin or 5 pin XLR IN/OUT, RJ45(Optional)
- Display: LCD screen
- Software upgrade via DMX signal

Pan/Tilt Movement

- Pan: 540°, 8-bit / 16-bit precision
- Tilt: 240° , 8-bit / 16-bit precision
- Automatic reset with error correction
- Tilt Lock

Power and Electrical

- Input Voltage Range: AC 100-240V 50/60Hz
- Max Power Consumption: 380W
- Power factor: 0.976
- Maximum current of the fixture: 1.73A/220V; 3.8A/100V

Size and Weight

- Product Dimensions: 509mm × 320mm × 742mm
- Net Weight: 36 kg
- Carton Dimensions: 810mm × 580mm × 395mm
- Gross Weight: 41 kg

Other

- IP Rate: IP66
- Operating environment: -20℃ ~ 45℃
- Maximum surface temperature: ≤ 60℃

Factory Configuration

- Power Cable: 1 pc (Part No.: F0200030016)
- Signal Cable: 1 pc (Part No.: F0200020008(3-pin)/ F0200020009(5-pin, Optional))
- Safety Rope: 2 pcs (Part No.: F0200010002)
- Clamp: 2 pcs (Part No.: C0499990007)

Optional Accessories/Packaging

- Flycase Part No.: B0100230001
- Flycase Dimensions: 620mm x 640mm x 825mm
- Flycase Gross Weight: 71 kg

Color Wheel



Fixed Gobo Wheel



Function Effect

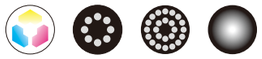

Illumination Diagram

